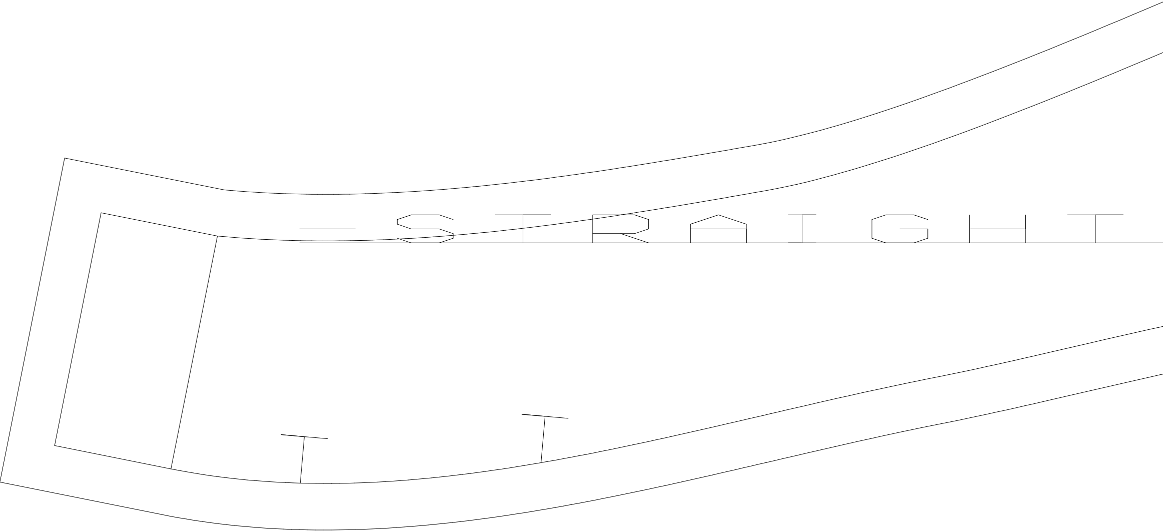

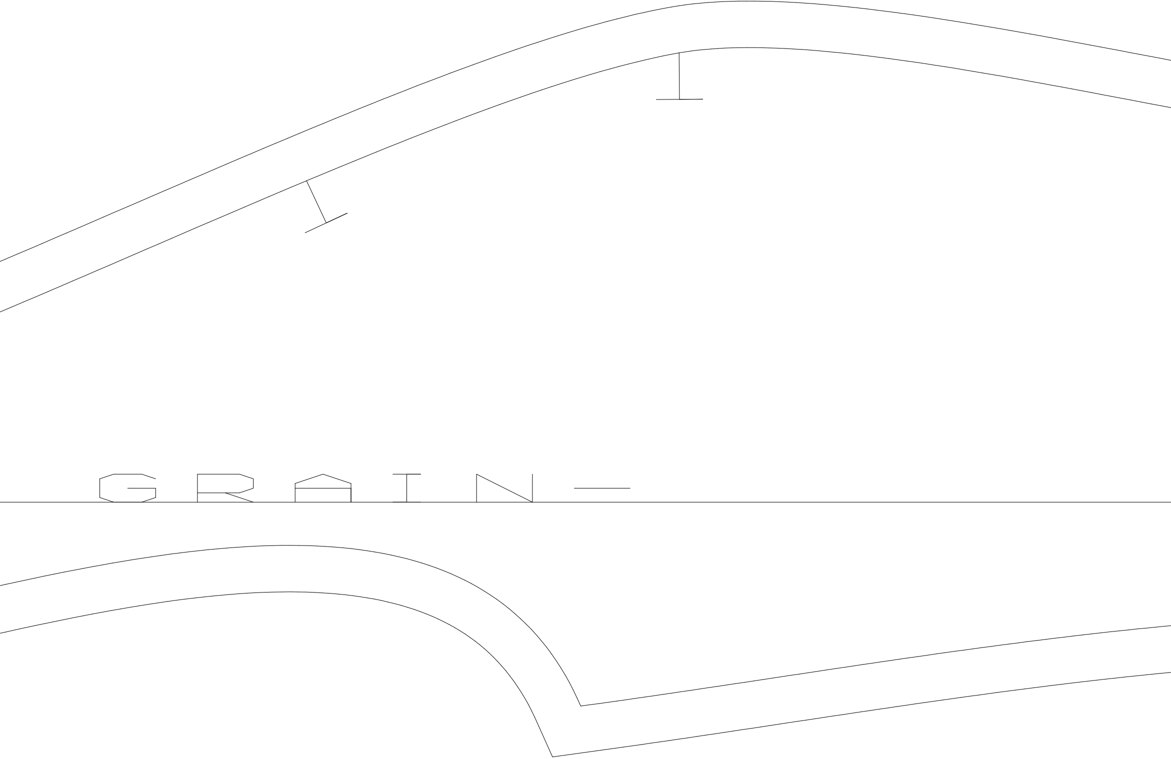

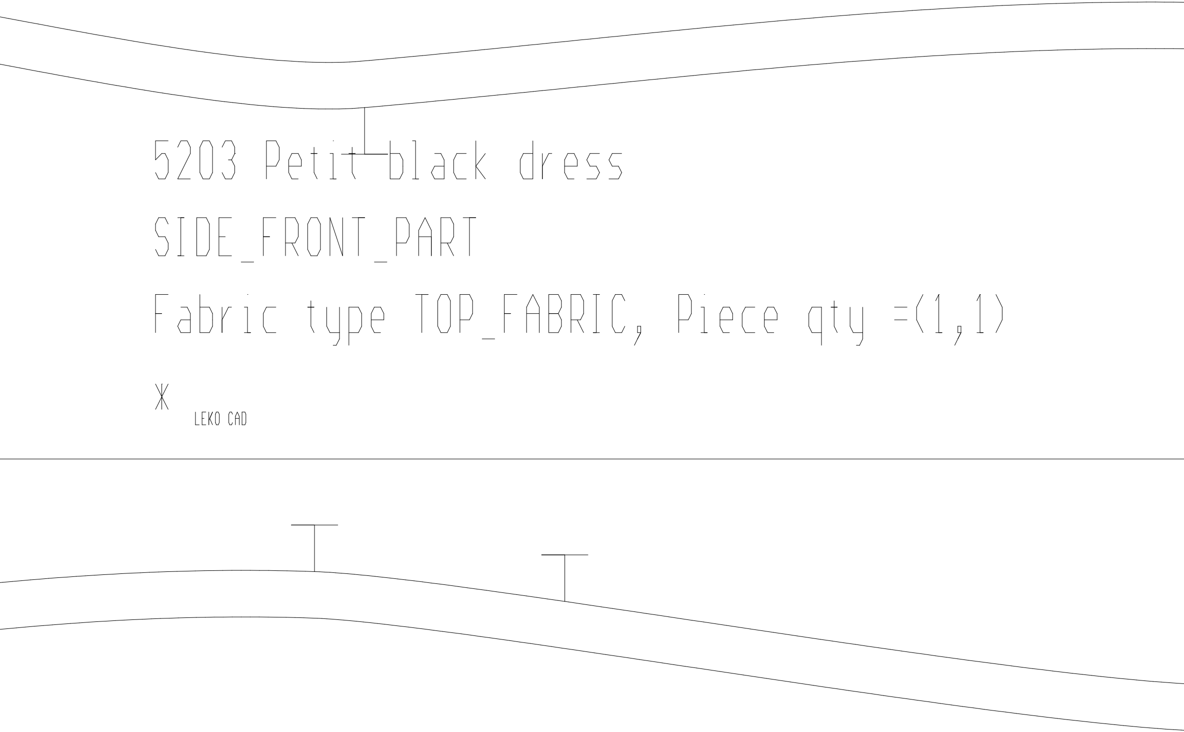

5203 Petit black dress

SIDE_FRONT_PART

Fabric type TOP_FABRIC, Piece qty =(1,1)

LEKO CAD

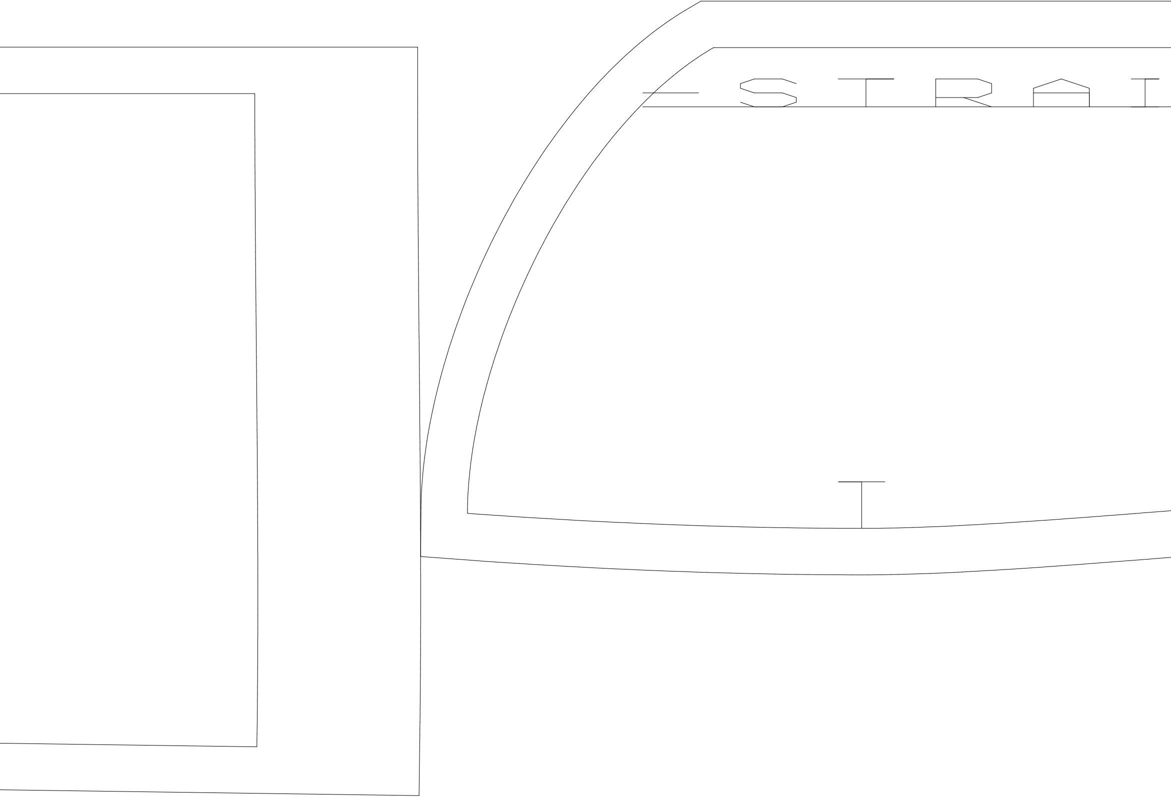

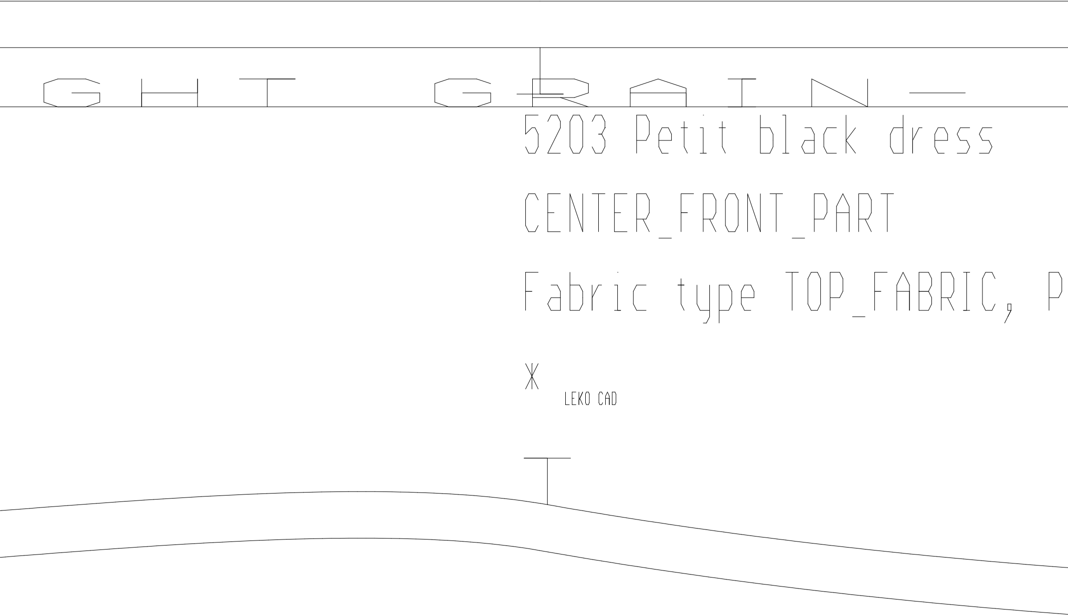
GHT GRAIN
5203 Petit black dress
CENTER_FRONT_PART
Fabric type TOP_FABRIC, P
LEKO CAD

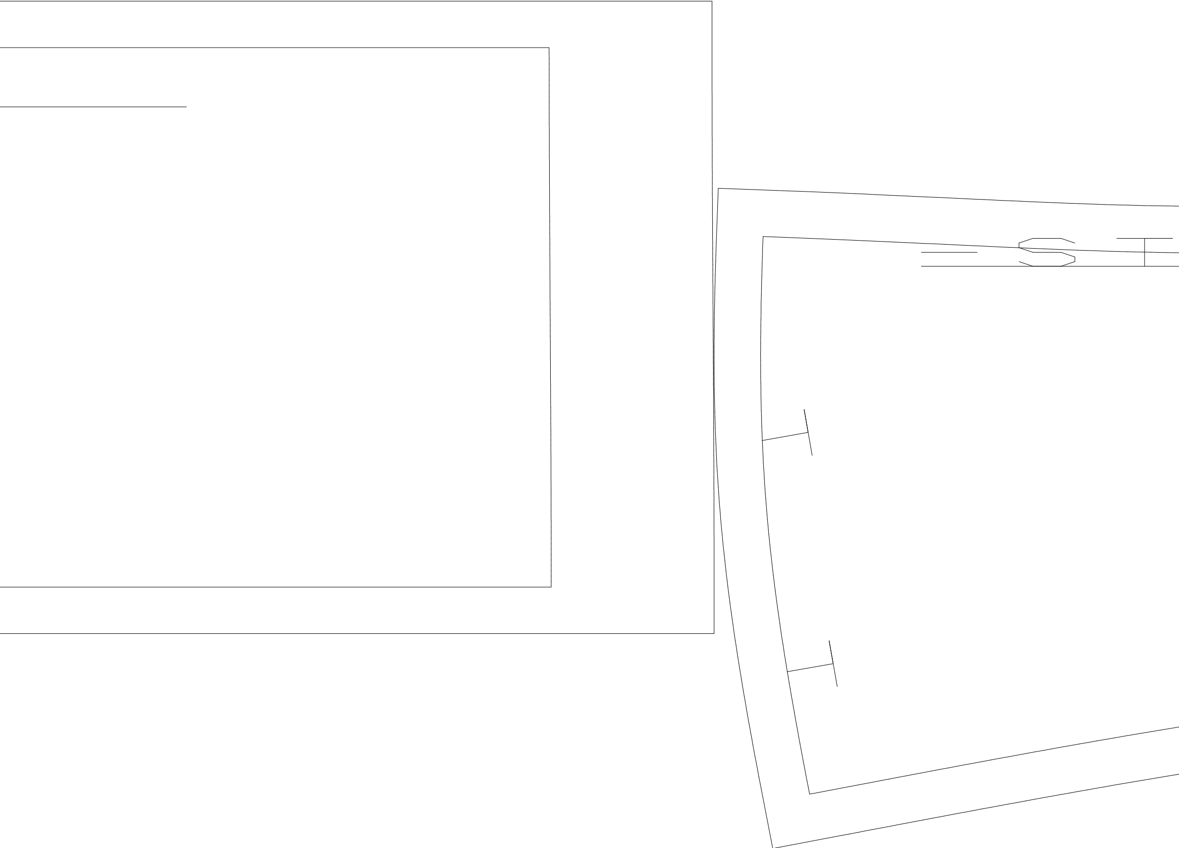

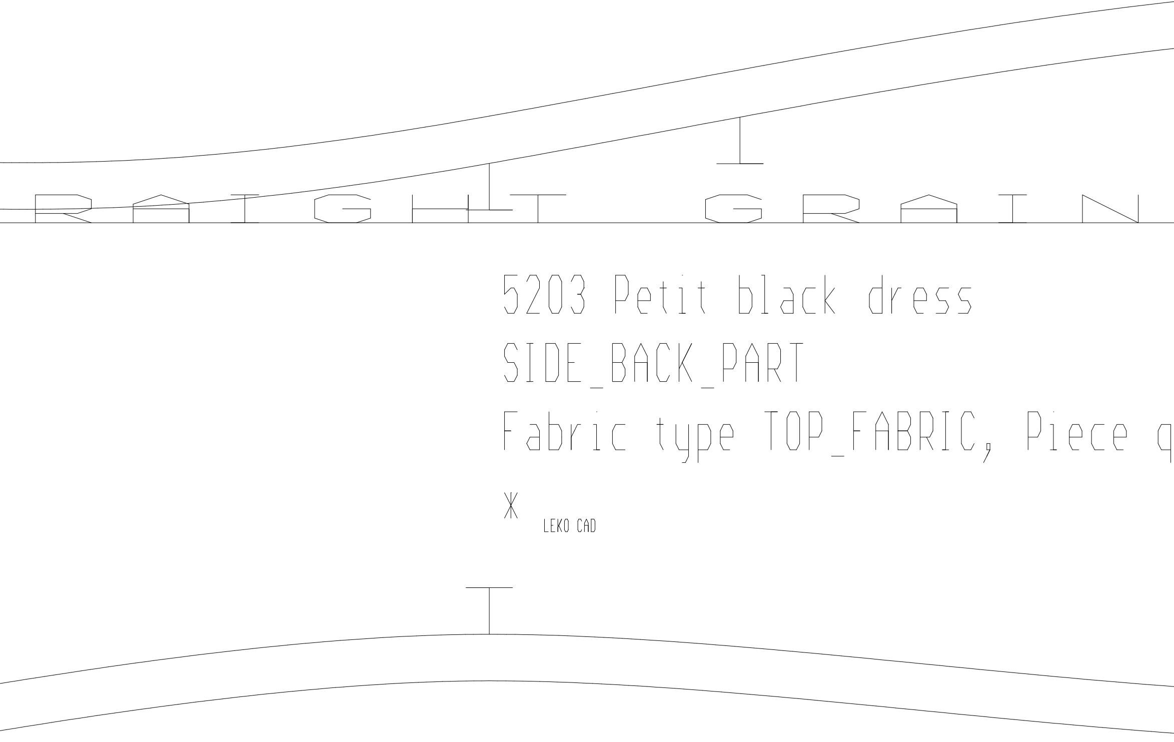
RAIGHT GRAIN

5203 Petit black dress

SIDE_BACK_PART

Fabric type TOP_FABRIC, Piece q

LEKO CAD

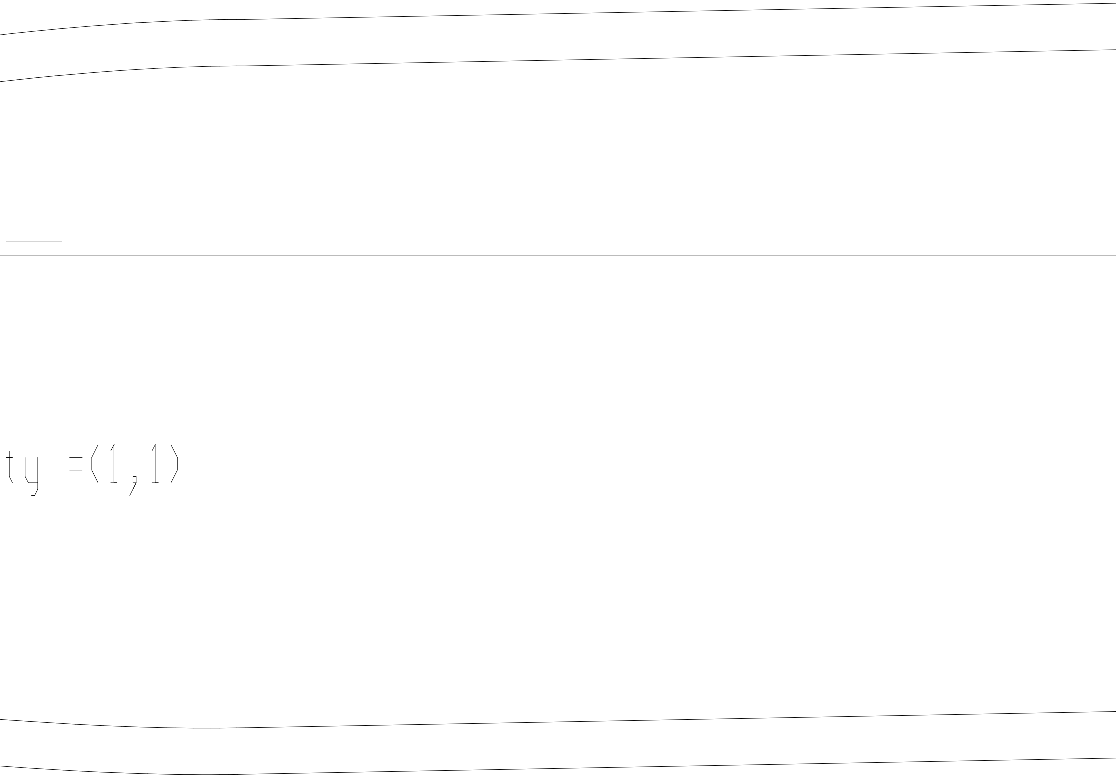

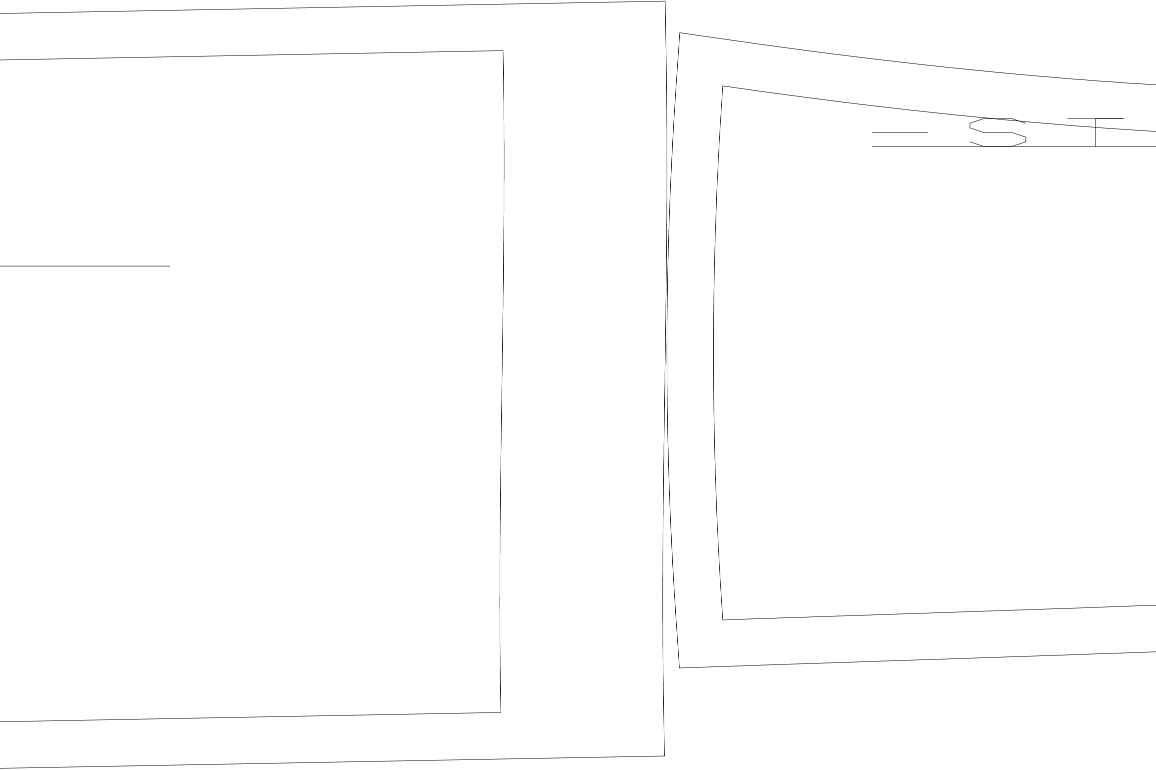

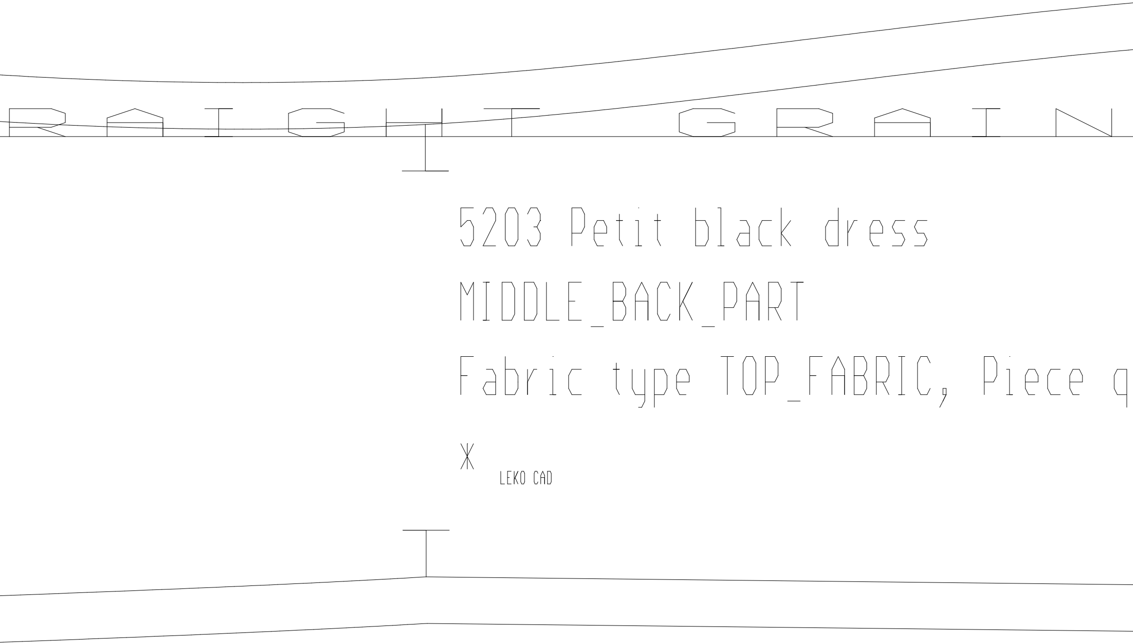
RAIGHT GRAIN
5203 Petit black dress
MIDDLE_BACK_PART
Fabric type TOP_FABRIC, Piece q
LEKO CAD

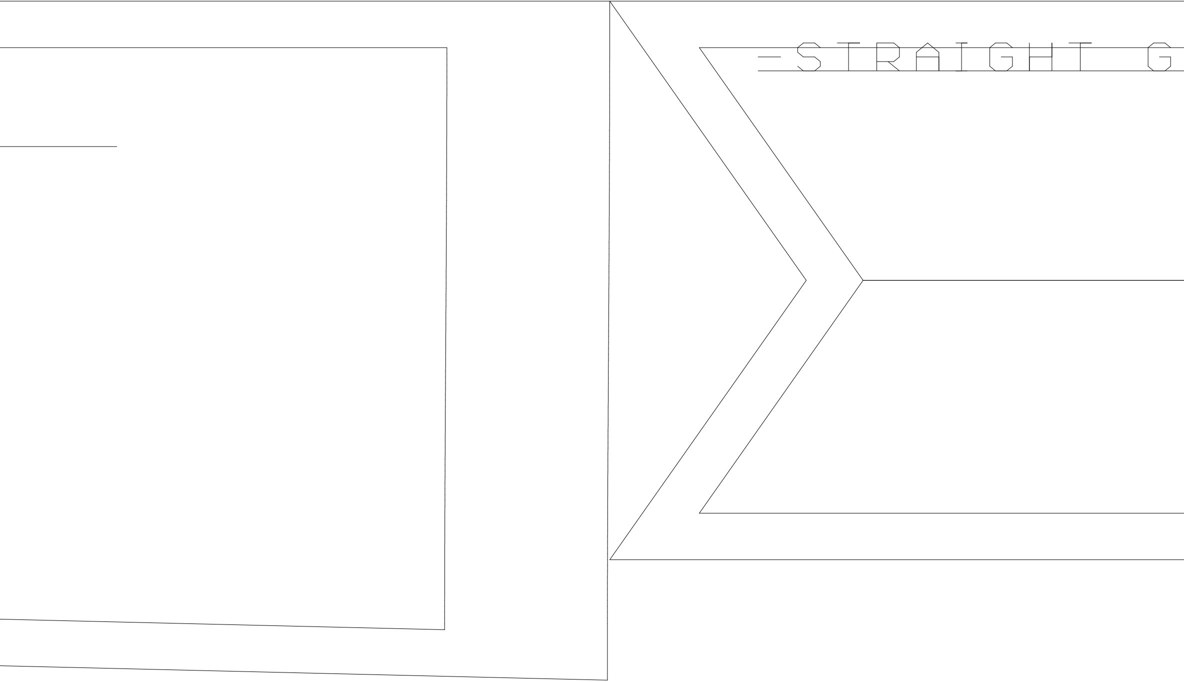

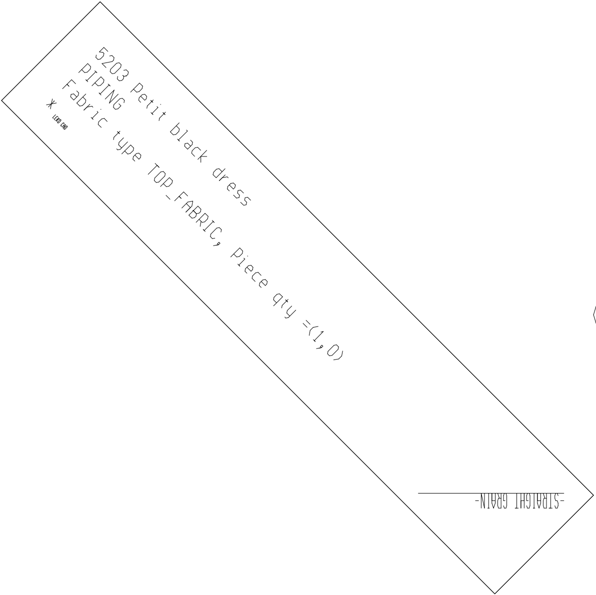
5203 Petit black dress
PIPING
Fabric type TOP_FABRIC, Piece qty =(1,0)
LEKO CAD
-STRAIGHT GRAIN-

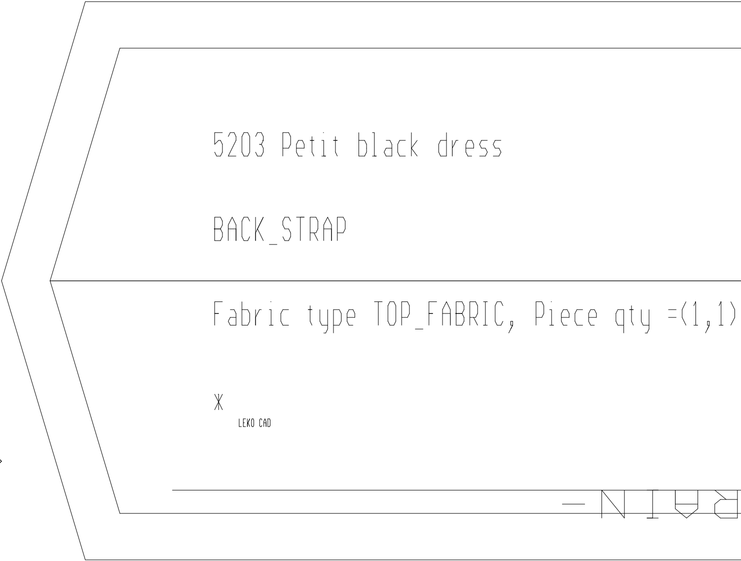
5203 Petit black dress
BACK_STRAP
Fabric type TOP_FABRIC, Piece qty =(1,1)
LEKO CAD
RAIN-